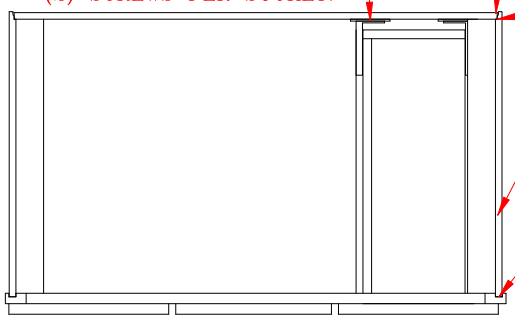

(2) HARDWARE KNOB TO BE PULLED AND PLACED INTO HARDWARE BAG.

(4) ESP LABEL PLACED ONTO BACK SIDE OF DOOR.

(5) SOFT CLOSE MECHANISM TO BE PULLED AND PLACED INTO HARDWARE BAG.

(13) PLACE (2) BUMPER PADS ON ALL DRAWER FRONTS.

(14) HARDWARE BAG SHIPPED WITH CABINET TO HOLD ALL LOOSE HARDWARE ITEMS (INCLUDES INSTALLATION SCREWS – PART OF KIT).

(18) INFORMATION CARD (NOT SHOWN) TO BE PLACED ON THE CABINET BOTTOM.

NOTES

(1)-MODIFIED BACK SOCKET/SCREWS.
(2)-ADDED INFORMATION CARD.
(3)-MODIFIED BACK STAPLE GAUGE.
(4)-UPDATED TITLEBLOCK.

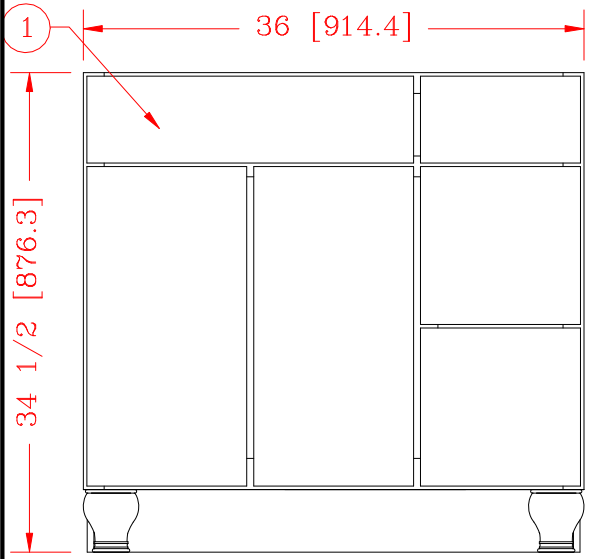

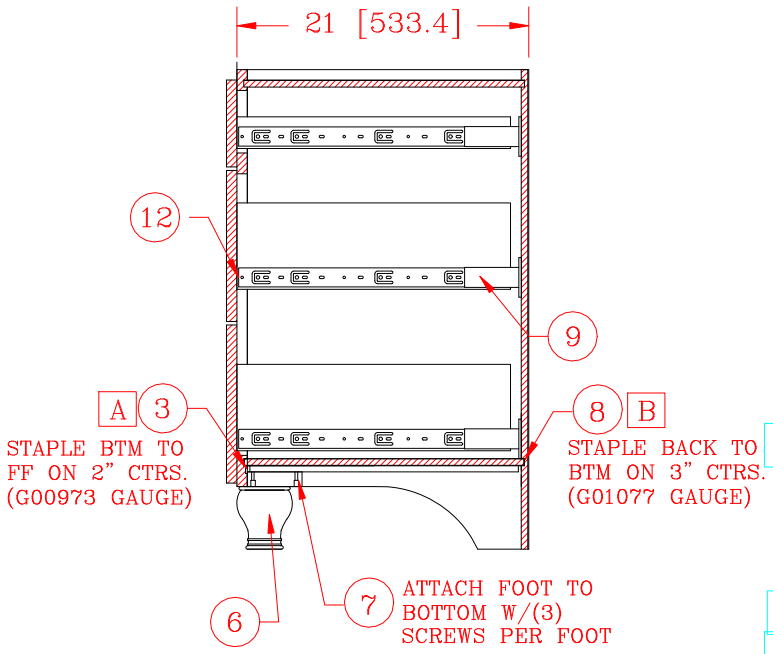

DRAWER BOX ASSEMBLY

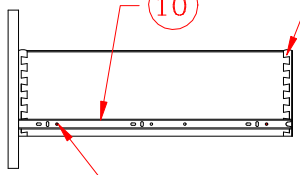

REF	COMPONENT		QTY
18	D2 INFORMATION CARD	994050	1
17	5/8" AY10EAA PIN	987014	E
16	WHITE GLUE	987101	D
15	HOT MELT	987121	C
14	HARDWARE BAG - CLEAR	995686	1
13	BUMPER PAD - CLEAR	999166	6
12	#6 X 3/8 PH PAN HEAD SCREW	987265	30
11	FULL EXT METAL BB BACK SOCKET	928072	6
10	FULL EXT BB DRAWER MEMBER	927322	6
9	FULL EXT BB CABINET MEMBER	927321	6
8	M10 STAPLES	987069	B
7	#7 X 1 1/4 PH TAPPING SCREW	987003	6
6	CABINET FOOT	VP0332	2
5	SOFT CLOSE HINGE MECHANISM	927320	2
4	ESP LABEL	995123	1
3	L11 STAPLES	987055	A
2	HARDWARE KNOB/PULL	VP0362	5
1	VSDB36 D2 CABINET KIT	VPM0092	1

Revisions				
#	Date	ECN/NPI	By	App.
1	12.3.14	14-0690	TAH	TAH
2	12.22.2014	14-0650	TAH	TAH
3	8.13.15	14-0630r1	TAH	TAH
4	8.18.15	15-0010r2	TAH	TAH
5				
6				
7				
8				

Tolerances (except as noted)
Metric ± 0.8mm
Fractional ± 1/32
Angular ± .5

MasterBrand Cabinets, Inc.

VSDB36 CABINET ASSEMBLY

Ref. Note: SERIES: D2

Drawn by TAH | Scale: NA | Drawing 1 of 1
Chk'd | Date: 7.24.13 | Drawing No. VPM0093
App'd TAH (EC013-086A)