ATRIO
3-Hole Bidet Mixer
M-Size

MODEL # 24016

Pure Freude an Wasser

GROHE

GROHE America, Inc | 200 North Gary Avenue, Suite G, Roselle, IL 60172
Phone: +1 (800) 444-7643 | Fax: +1 (800) 225-2778 | us-customerservice@grohe.com

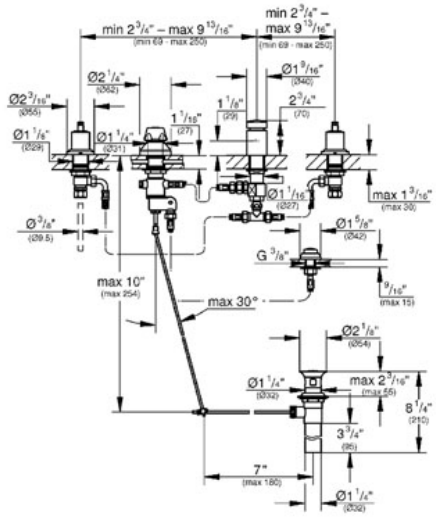

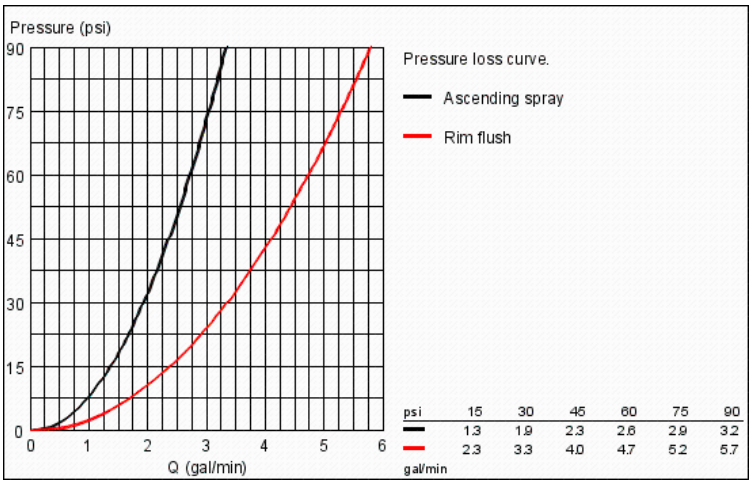

UPC C ®

Product Description:
3-Hole Bidet Mixer
M-Size

Standard Specification:
- **GROHE StarLight®** finish
- Diverter: rim flush/bidet spray
- Handles sold separately
- Check installation compatibility with bidet fixture

Applicable Codes & Standards:
- Energy Policy Act of 1992
- ASME A112.18.1/CSA B125.1

Color:
- ❑ 24016 000 chrome
- ❑ 24016 EN0 Brushed Nickel