Detailed Diagram of Acrylic Shower Wall Components

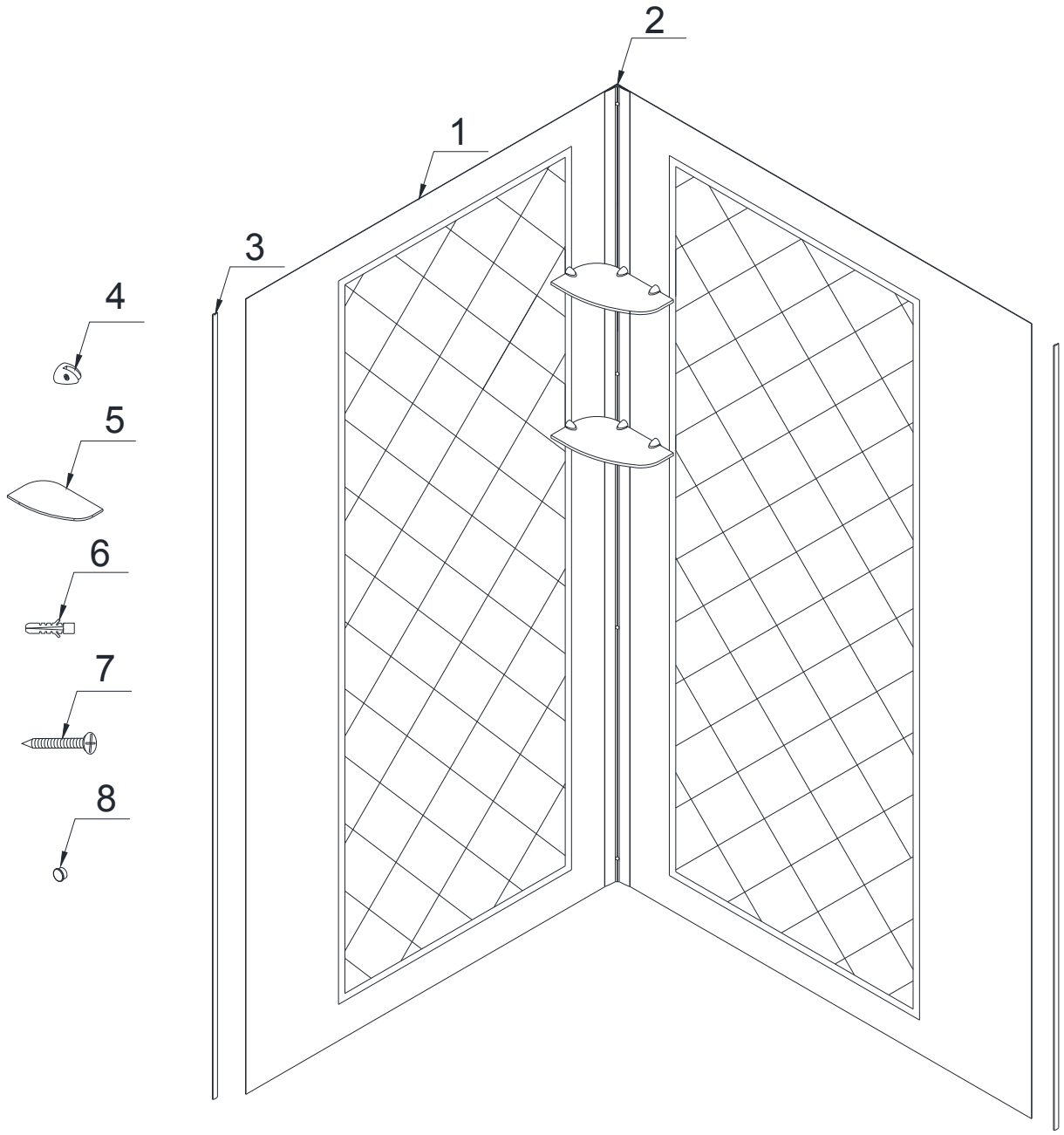

Packing List

01	Side panel	2pcs	05	Glass shelf	2pcs
02	Corner cover	1pc	06	Wall anchor	11pcs
03	Decorative edge molding	2pcs	07	Countersunk screw ST4.2×30	11pcs
04	Shelf bracket	6pcs	08	Decorative cover	5pcs
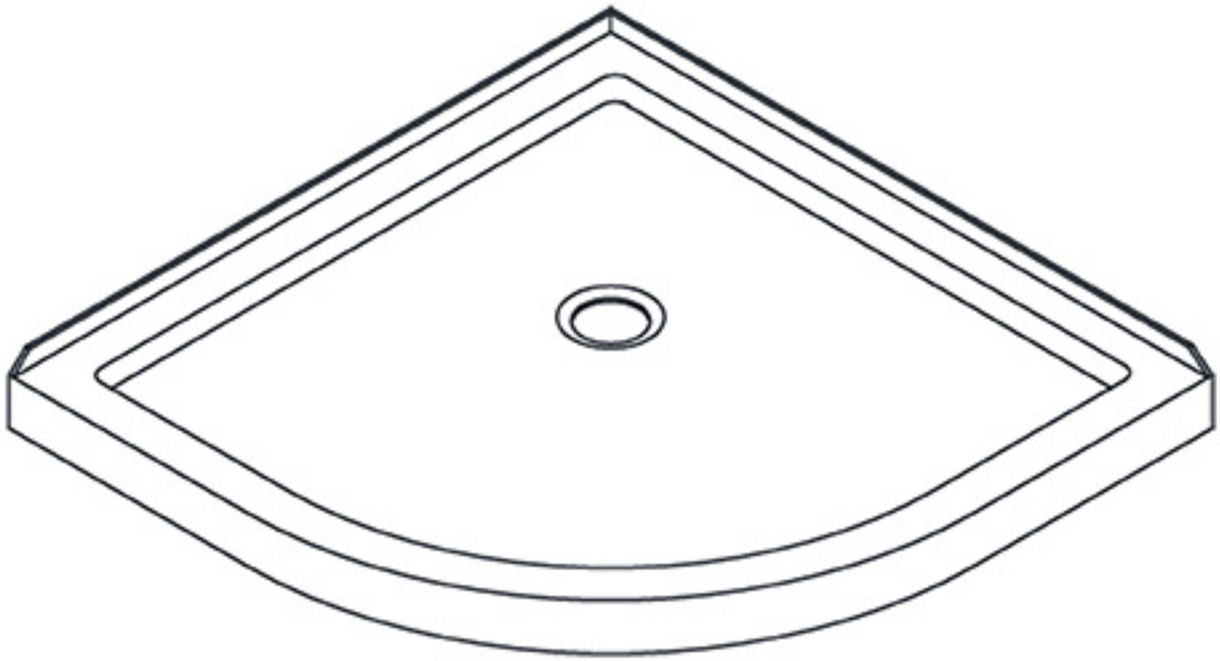
NOTE: Unpack your unit carefully and inspect it. Lay it out and identify all parts using the detailed diagram and packing list in your manual as a reference. Before discarding the carton, check for small hardware bags that tend to fall to the bottom of the box. If any parts are damaged or missing, please contact DreamLine™ for replacement.