Replacement Parts List

Estates 4 in. 2-Handle Low Arc Bathroom Faucet

MODEL	STORE SKU#	FINISH
408HE-03204	514-497	Brushed Nickel
67102-8096H	467-658	Mediterranean Bronze

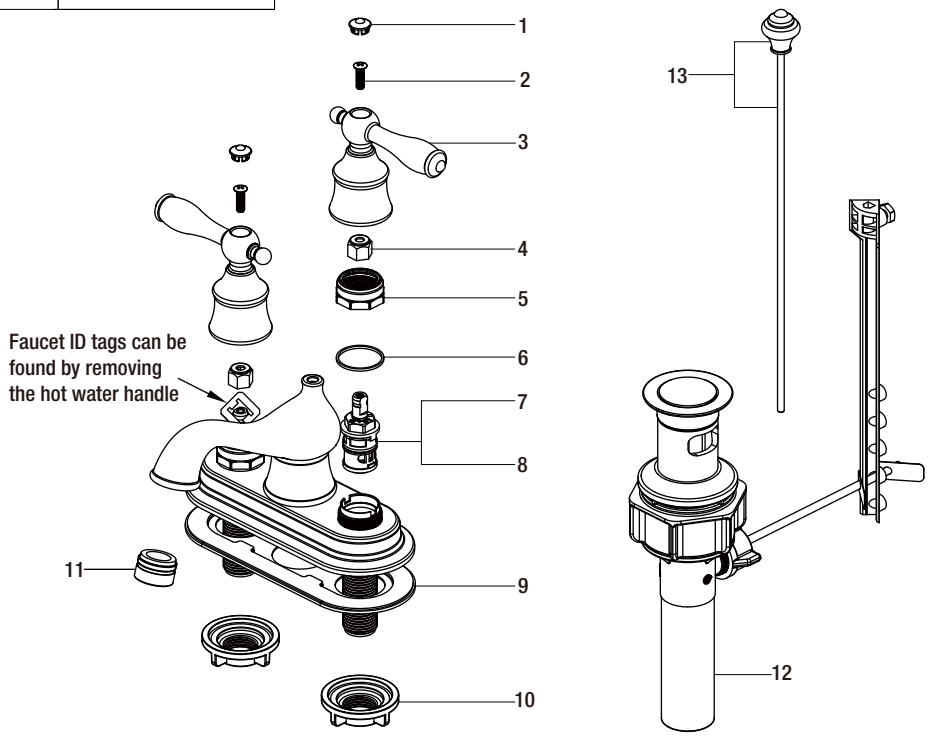

Part	Description	Part Number
1	Index	RP10003*
2	Screw	RP50005
3	Handle	RP13201*
4	Inverter	RP64044
5	Bonnet nut	RP70435
6	Washer	RP64123
7	Cartridge H	RP20013

Part	Description	Part Number
8	Cartridge C	RP20014
9	Gasket	RP80182
10	Mounting nut	RP56001
11	Aerator	RP30119*
12	Drain assembly less lift rod	RP40096*
13	Lift rod	RP40024*

*Specify Finish

Many replacement cartridges, aerators, and drain assemblies can be purchased at your local The Home Depot store or online at HOMEDEPOT.COM

To Order Parts Call: 1-855-HD-GLACIER

Rev. 01