Air and Material Controls

Spray performance will depend upon a number of factors: material thickness, air power, spray pattern selected, and material flow. Testing different variations of the control settings will help you achieve the desired results. See descriptions and suggested Power and Material Settings Guide below to help with your project.

X-Boost™ Power Dial

The X-Boost™ power dial adjusts the level of air pressure produced by the turbine. The X-Boost™ power dial is factory-set at maximum out of the box.

- A high air power level will result in faster coverage and a smoother finish with thicker materials.
- Lowering the air power will result in larger drops of material being sprayed from the gun, and will create a slightly rougher finish.
- Use the arrow (a) to set power level with the three markings (b) on the dial. Thinnest section = low. Middle section = medium. Thickest section = high.

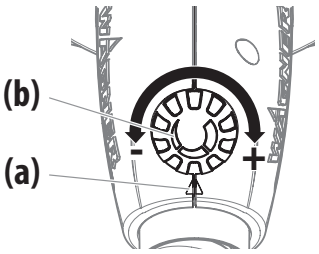

Tip: The thicker the material you are spraying, the higher the air pressure you will need.

Tip: For fine-finish work with thinner materials, you may want to decrease the air pressure. Spraying a thinner material at high air pressure will result in more overspray. Overspray is sprayed material that does not stick to the spray surface and bounces back.

Material Flow Control

The material flow control determines the amount of spray material that is sprayed from the spray gun.

- For thicker materials, it is recommended that you start with the highest material flow setting and then gradually **decrease** the flow to suit your particular spraying needs.
- For thinner materials, it is recommended that you start with a low material flow setting, and then gradually **increase** the flow to suit your particular spraying needs.
- The higher the flow setting, the quicker you will have to work in order to avoid drips and sags in your spray pattern.

Set the material flow by turning the red knob on the trigger of the spray gun.

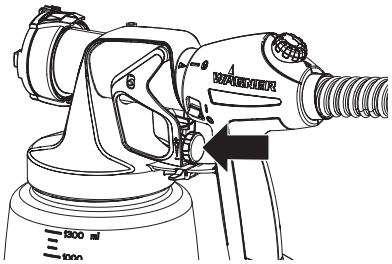

Tip: Spraying with the control set too high will result in a spray pattern that runs and sags (too much material).

Tip: Spraying with the control set too low will result in a spray pattern that does not cover (not enough material).

Tip: To ensure desired results are achieved with the controls, test your spray pattern on the spray poster or a scrap piece of wood or cardboard.

Power and Material Settings Guide

Coating	iSpray Nozzle		Detail Finish Nozzle	
	Material Flow	Air Power	Material Flow	Air Power
Transparent / semi-transparent stains, sealers	Light	Low	Med/Heavy	Low
Lacquers (water based)	Light	Low	Med/Heavy	Low
Solid stains	Med	Low / Med	Med	Low / Med
Polyurethane	Med	Low / Med	Med/Heavy	Low / Med
Oil enamels	Heavy	Med	Heavy	Med-Hi
Latex paints plus primers, Latex paints	Heavy	Med-Hi	N/A	N/A
Oil or latex primers	Heavy	Med-Hi	N/A	N/A

Spray Pattern Adjustment

Adjust Spray Shape

The spray pattern shape is adjusted by turning the adjustment ring (iSpray) or air cap ears (Detail Finish) to either the vertical, horizontal, or diagonal positions. The positions of the air cap and the corresponding spray pattern shapes are illustrated below.

Test each pattern and use whichever pattern is suitable for your application.

NEVER trigger the nozzle while adjusting the ears on the air cap. NEVER point the nozzle at any part of the body.

iSpray

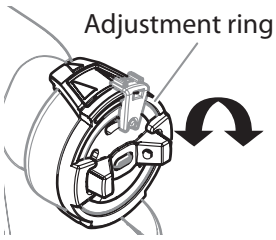

Detail Finish

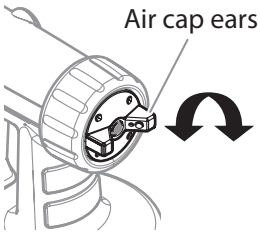

Horizontal pattern

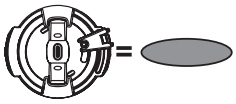

→ Use 'up and down' spraying motion

Vertical pattern

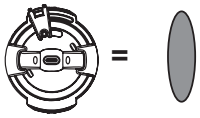

→ Use 'side to side' spraying motion

Diagonal pattern*

→ Use 'up and down' or 'side to side' spraying motion

→ Use lower air power / material flow

→ For coating smaller areas, corners and edges

IMPORTANT: When changing the spray pattern, make sure the black retaining ring is not loosened.

***Note:** The air cap can be set diagonally on the Detail Finish nozzle only. To achieve a round pattern with the iSpray nozzle, see the "Adjust Spray Width" section.

Adjust Spray Width - iSpray only

The spray width lever on the iSpray nozzle determines the width of the spray pattern.

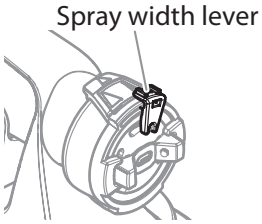

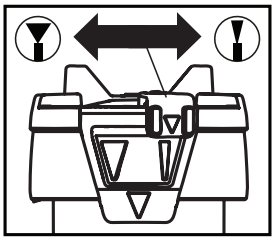

Wide pattern

→ For coating large surfaces

→ Use higher air power

→ Use higher material flow

Narrow (round) pattern

→ For coating smaller areas, corners and edges

→ Use lower air power

→ Use lower material flow

Tips:

1. Start with a fan pattern for painting trim work (1-5" width) and larger surfaces like doors and walls (>5" width).
2. Adjust Material & Air Flow settings as shown in chart based on coating, fan pattern width, and nozzle.
3. Fine tune the Material and Air Power settings to achieve the best results for your application.
4. Use narrow pattern for detailed work, touch up.
5. Recommended settings for Material and Air Power may change if the coating is thinned.

Proper Spraying Technique

STOP **The room you are spraying must be properly masked in order to prevent overspray from covering woodwork, floors or furnishings. Make sure you have properly masked the room per the instructions on the enclosed "Taping Guide".**

If spraying with an air-assisted spray system is new or unfamiliar to you, it is advisable to practice on a piece of scrap wood or cardboard before beginning on your intended workpiece and/or test with water.

Surface Preparation

All objects to be sprayed should be thoroughly cleaned before spraying material on them. Areas not to be sprayed may, in certain cases, need to be masked or covered.

Spray Area Preparation

The spray area must be clean and free of dust in order to avoid blowing dust onto your freshly sprayed surface.

How to Spray Properly

STOP **It is important to keep your arm moving whenever the gun is being triggered. If you pause or linger in one spot too long, too much material will be sprayed to the surface.**

Note : Do not pull trigger at any time if the turbine is not running. This will result in spray material leaking from the nozzle.

- Position the spray gun perpendicular to and six (6) or more inches from the spray surface, depending upon the spray pattern size desired. With reduced material flow and air power, you can get closer to the spraying surface.
- Spray parallel to the surface with smooth passes at a consistent speed as illustrated below. Doing this will help avoid irregularities in the finish (i. e. runs and sags).

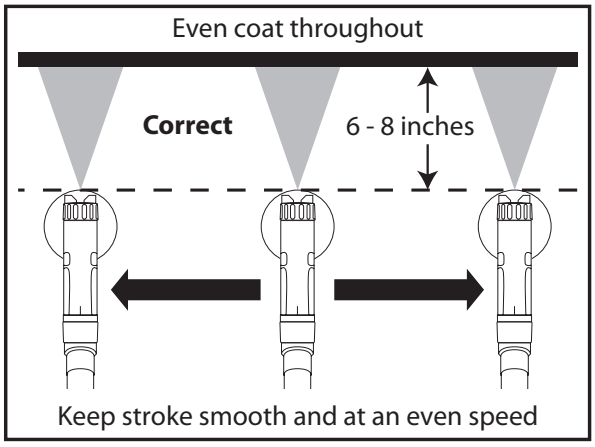

- Always apply a thin coat of material on the first pass and allow to dry before applying a second, slightly heavier coat.
- When spraying larger surfaces, overlap each spray pass by at least 50% This will ensure full coverage.
- When spraying, always trigger the spray gun after spray pass has begun and release trigger before stopping the pass. Always keep the gun pointed squarely at the spray surface and overlap passes slightly to obtain the most consistent and professional finish possible.

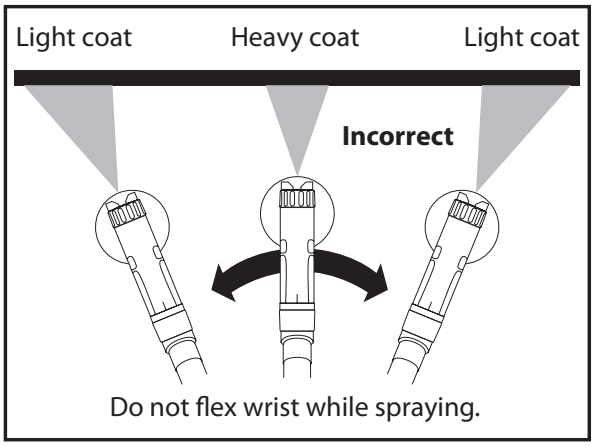

STOP **During a project, periodically wipe the nozzle tip with a cloth to remove any dried paint.**

Note: When you quit spraying for any length of time, turn the turbine and handle switches to OFF position (I) and place the nozzle onto the spray gun holder on the turbine.

When you restart, wipe the nozzle with a damp cloth to remove any dried paint.

IMPORTANT: DO NOT sit or stand on the Power Box.

Proper Spraying Technique

Pattern Examples

Use the images and guidelines below in order to assist you in achieving the desired spray pattern for your project. These are meant to be general starting points - you may have to slightly modify certain controls on the system in order to get the exact performance you need.

STOP **During a project, periodically wipe the nozzle tip with a cloth to remove any dried paint.**

Large Surface Projects

Generally, high material flow and air power are needed for spraying large surface areas, such as walls and decks.

The iSpray nozzle is ideal for these applications and is designed for broad coverage in either horizontal or vertical spraying.

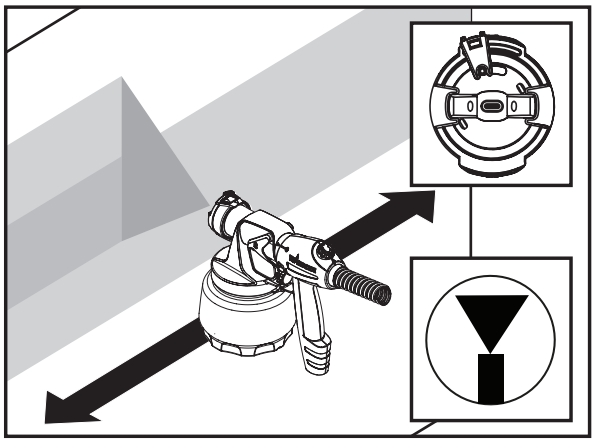

- The air cap position will determine the movement direction of the spray gun.

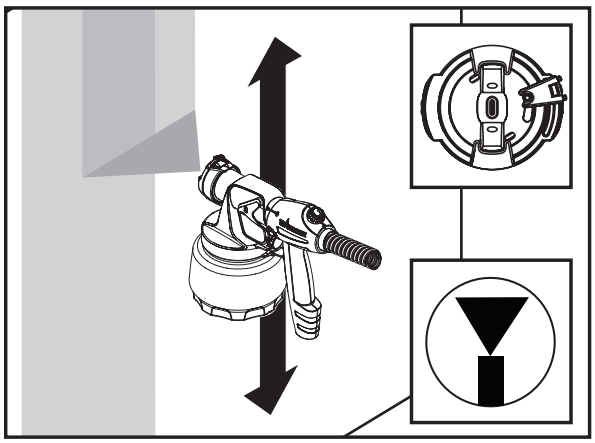

Small Surface Projects

Generally, low material flow and air power are needed for spraying smaller surface areas, such as corners, lattice, or spindles.

For this type of project, reduce power, material flow and switch to a narrow width when using the iSpray nozzle.

The Detail Finish Nozzle provides an even narrower pattern for smaller surface projects and fine finishing. Moving closer to the spray surface narrows the fan and moving farther away widens it.

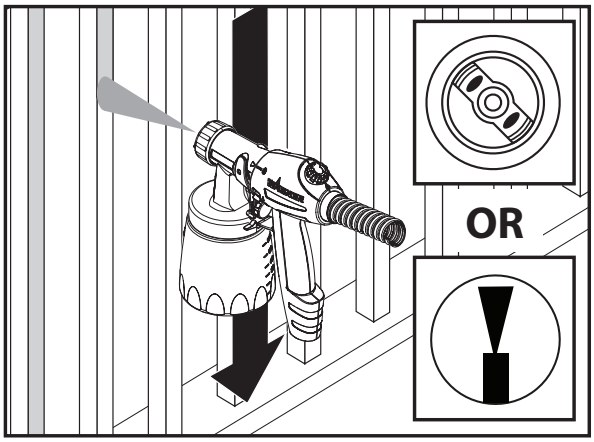

- If you feel the material is going on too thin, increase the material flow.
- If you feel the material is going on too thick, decrease the material flow even further or move the spray gun further away from the surface.

Note: If after following the guidelines on these two pages you are still not getting the spray performance you need, refer to the 'Troubleshooting' section on page 16.

Besides adjusting the controls, other factors that should be considered when spraying:

- **Distance from the spray object -** if you are too far from the spraying surface, the material will go on too thin, and vice versa.
- **Material thickness -** if the spray pattern runs and/or is too splotchy, the material may need to be thinned.

Note: Only thin the material if absolutely necessary to improve spray performance. Optimal spray performance should be acheived simply by adjusting the various controls on the unit.

If the material needs to be thinned, dilute the material in steps of 5% - 10% until the desired spray pattern is acheived.

- **Spray gun movement -** moving the gun too quickly will cause the spray pattern to be too thin and excess overspray. Moving the gun too slowly will cause the spray pattern to be too coarse or thick.

Cleanup

Flushing the unit

Before you begin:

When cleaning, use the appropriate cleaning solution (warm, soapy water for latex materials; mineral spirits for oil-based materials)

IMPORTANT: Never clean air cap or air holes in the nozzle with sharp metal objects. Do not use solvents or lubricants containing silicone.

Special cleanup instructions for use with flammable solvents (must have a flashpoint above 100ºF (38ºC):

- **Always flush spray gun outside.**
- **Area must be free of flammable vapors.**
- **Cleaning area must be well-ventilated.**
- **Do not submerge turbine!**

To Flush the Unit:

1. Turn turbine and handle switches to OFF (0) position. Unplug the power cord. Loosen the material container by 1/2 turn, but do not remove it. This will relieve any pressure left over in the system.

   Pull the trigger so that the material inside the spray nozzle drains back into the container.
2. Unscrew the container and remove. Empty any remaining material back into the material container.
3. Pour a small amount of the appropriate cleaning solution into the cup (Water=1/2 full. Mineral spirits=1/4 full).
4. Attach the cup to the nozzle and plug in the turbine. Turn turbine and handle switches to ON (I) position.
5. Spray the cleaning solution into a safe area. While spraying, gently shake the spray gun. This slight agitation will help break up smaller particles of spray material.
6. Turn turbine and handle switches to OFF (0) position. Unplug the power cord. Loosen the material container by 1/2 turn, but do not remove it. This will relieve any pressure left over in the system.

   Pull the trigger so that the material inside the spray nozzle drains back into the container.

IMPORTANT: If you cleaned the sprayer using mineral spirits, repeat steps 1-6 using warm, soapy water.

Move on to "Cleanup - Cleaning the Nozzle", next page.

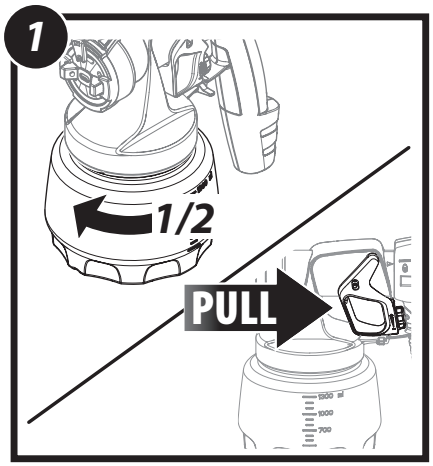

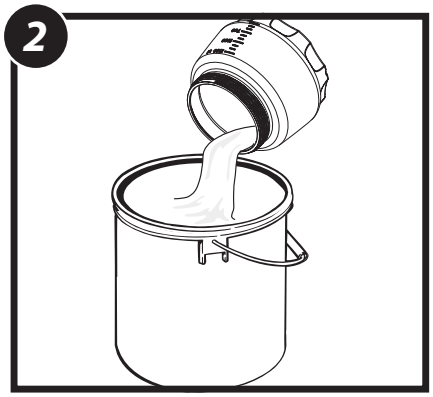

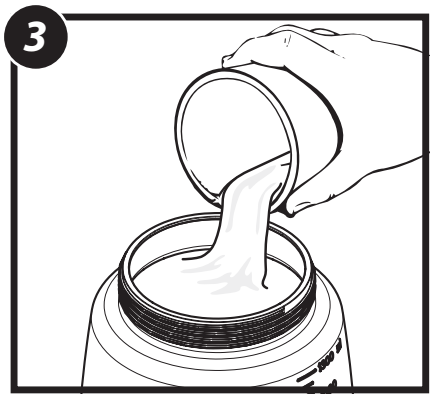

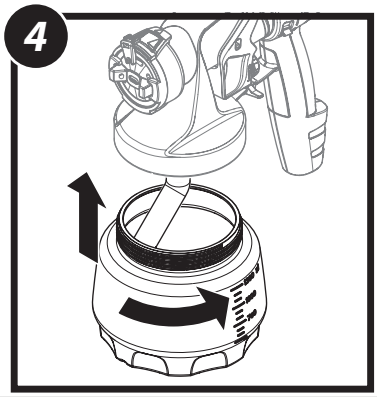

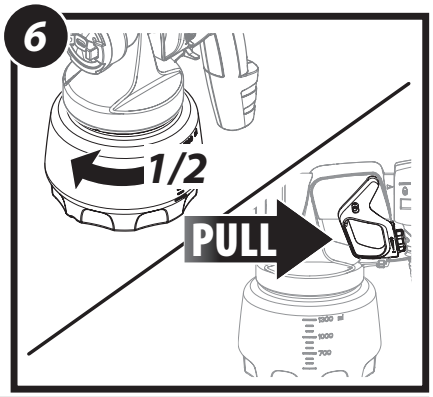

Cleaning the Nozzle

To Clean the Nozzle:

1. Make sure power cord is unplugged. Remove the air hose from the turbine.
2. **iSpray nozzle only -**
   a. Remove the adjustment ring (a) carefully from the connecting nut (b). Loosen the connecting nut.
   b. Remove the parts as shown*. Clean all parts with a cleaning brush and the appropriate cleaning solution.
   To reassemble, see the instructions on the next page.
3. **Detail Finish nozzle only -**
   a. Unscrew the nut and remove the air cap and nozzle.
   Remove the parts as shown*. Clean all parts with a cleaning brush and the appropriate cleaning solution.
   Reassemble all parts when clean**.
4. Clean the air vent (c) on the suction tube with a soft bristled cleaning brush.
5. Push the tab below the trigger, twist and separate the nozzle from the handle.
   Clean the rear of the nozzle (d) with the appropriate cleaning solution. Use a thin layer of petroleum jelly to lubricate the O-ring (e).

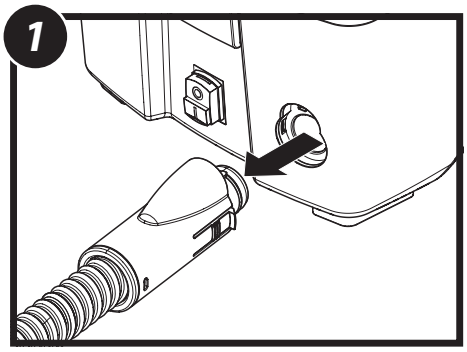

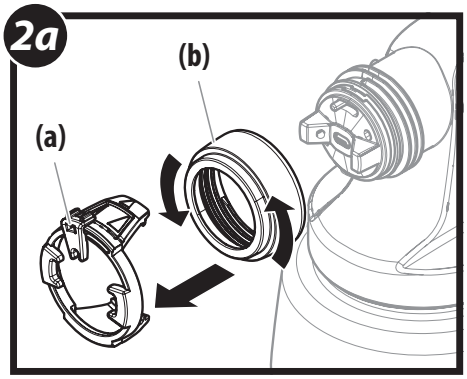

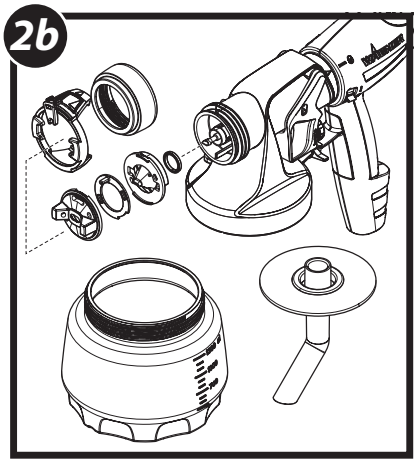

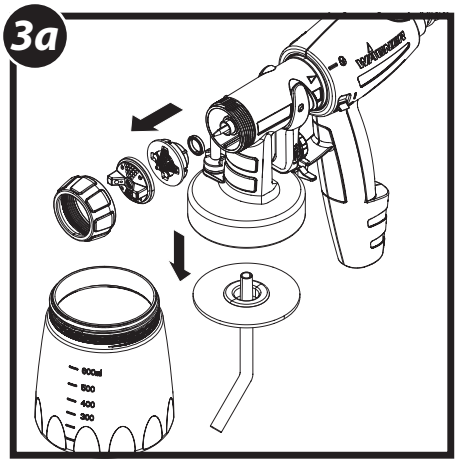

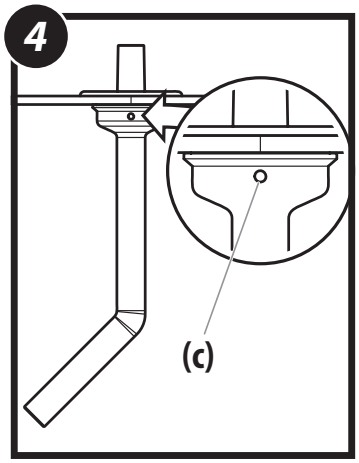

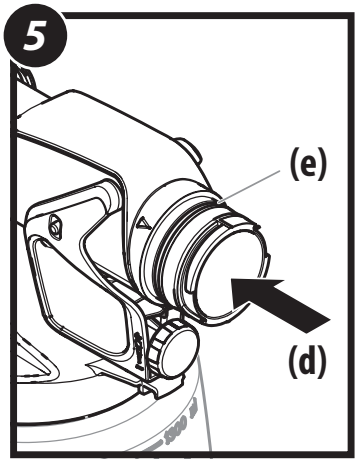

** Nozzle seal*

The red nozzle seal may become stuck inside the spray nozzle when the nozzle is removed. If this occurs, make sure to pull it out.

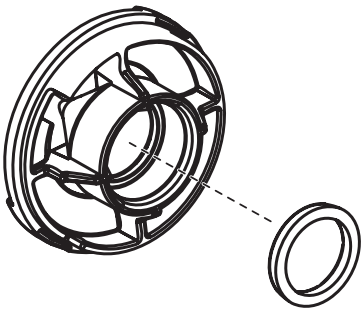

** It is important that the nozzle seal inside the nozzle be re-installed properly. Make sure the cup side of the seal (the side with the groove) is facing out towards the front of the nozzle. Improper installation will cause leakage